komfovent

RHP 900 H C5

Nominal air flow, m³/h	900
Nominal air flow, l/s	250
Electric air heater capacity, kW / Δt, °C	2 / 6,2
Supply voltage, V	3~400
Maximal operating current, A	8,7
Power supply cable, mm²	5x1,5
Electric power input of the fan drive at maximum flow rate, W	211
Noise power level, L_{WA}, dB(A)	51
Noise pressure level, L_{PA}, dB(A) (3 m)	41
Filters dimensions B×H×L, mm	705×390×46
Supply filter class	ePM1 60 (F7)
Exhaust filter class	ePM10 50 (M5)
Unit dimensions B×H×L, mm	800×885×1300
Panel thickness, mm	45
Maintenance space, mm	850
Refrigerant R1234YF, kg	1,4
Unit weight, kg	190



EXV BLDC



Performance

Unit with standard equipment

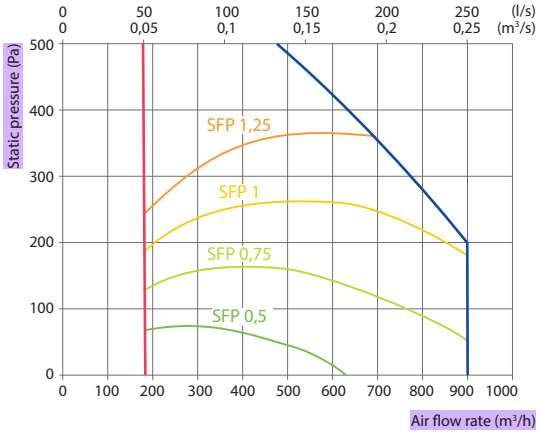

Temperature efficiency

	Winter					Summer		
Outside temperature, °C	-23	-15	-10	-5	0	25	30	35
After heat exchanger, °C	14	15,4	16,3	17,2	18,1	22,5	23,4	24,3

Indoor +22°C, 20 % RH

Shown as right (R1)

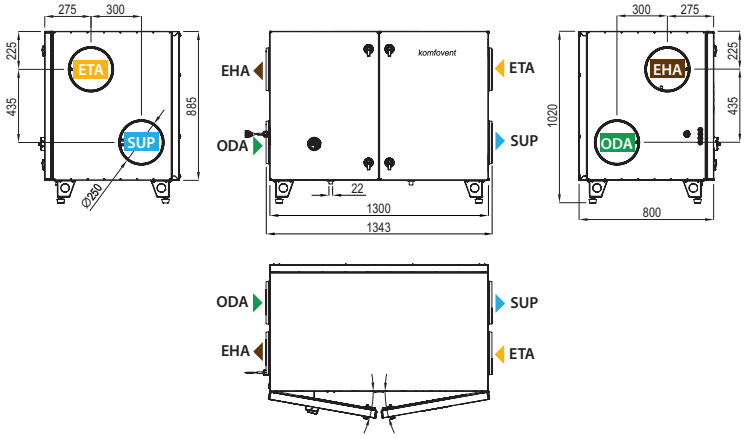

Accessories

Closing damper		AGUJ-M-250+TF24/CM24
Silencer	ODA/ETA	ASTS-250-600-M
	SUP/EHA	AGS-250-100-900-M
Siphon		MINI

Shown as left (L1)

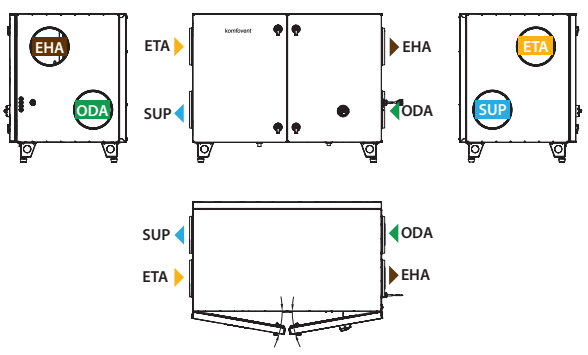

ODA – outdoor intake **SUP** – supply air **ETA** – extract indoor **EHA** – exhaust air

The newest data can be verified in the latest version of selection software. UAB KOMFOVENT reserves the right to introduce the changes of parameters and sizes in the process of improvement of the air handling units.

Heating mode

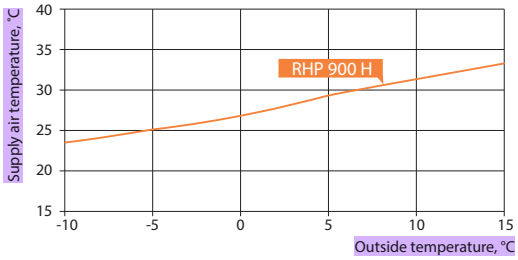

Application: 20°C, RH 45% indoor.

Cooling mode

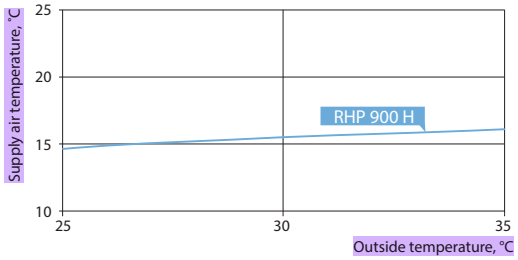

Application: 24°C, RH 55% indoor.
Total (heating and cooling) – rotary heat recovery + heat pump.

Heat pump parameters

	Heating			Cooling	
Outdoor temperature, °C	7	2	-7	35	27
Outdoor air related humidity, %	86	84	74	40	45
Indoor air temperature, °C	20	20	20	27	21
Indoor air related humidity, %	50	50	45	40	50
Supply air temperature, °C	27,6	25,9	22,7	17,8	12,4
Heat pump heating/cooling power, kW	3,04	2,75	2,29	3,28	3,08
Heat pump heating/cooling power consumption, kW	0,5	0,47	0,42	0,76	0,61
System SCOP [1,2,3], Average climate / System SEER [1,2,3]		9,61		5,47	
COP/EER	6,1	5,89	5,5	4,32	5,04

[1] Rotary heat exchanger wave size "ML"
[2] Rotary heat exchanger + heat pump
[3] According to EN 14825 standard

The newest data can be verified in the latest version of selection software. UAB KOMFOVENT reserves the right to introduce the changes of parameters and sizes in the process of improvement of the air handling units.